1 Copyright (c) 2011 Dogwood Valley Press, LLC. Copying and posting without permission strictly prohibited.

2

3 Multi-tank Batch Control

4 Additional internal variable declarations:

Variables		Data Type	
Run		BOOL	On while station running
Step_1 to Step_22	BOOL	Step-in-progress bits	
Delay_Tmr	TON	Delay after emptying half of tanks	
Reaction_Tmr	TON	Times reaction	

Conversion formulas
WT10x_VAL = (WT10x_MEAS / 32000) * (1000 - 0) + 0
TT103_VAL = (TT103_MEAS / 32000) * (100-0) + 0

5 Start/stop and initial start. During reset prevent start. Step 15 also unlatches Run.

6 START_PB %I00001 | STOP_PB %I00002 | Run | Run (M)

7 Run | Step_1 | Step_2 | Step_3 | Step_4 | Step_5 | Step_6 | Step_7 | Step_8 | Step_9 | Step_10 | Step_11 | Step_12 | Step_13 | Step_14 | Step_15 | Step_16 | Step_17 | Step_18 | Step_19 | Step_20 | Step_21 | Step_22

...7 Step_1 (S)

8 Step 1 - Make sure Run is on (especially after a pause)

9 Step_1 | Run → R Step_1; S Step_2; S Step_4; S Step_6

10 Step 2 - Fill tank 1. Transition to wait when full.

11 Step_2 | GE REAL: WT101_VAL %R00200 IN1, 300.0 IN2 → Q | Run → R Step_2; S Step_3

12 Step 4 - Fill tank 2. Transition to wait when full.

13 Step_4 | GE REAL: WT102_VAL %R00202 IN1, 400.0 IN2 → Q | Run → R Step_4; S Step_5

14 Step 6 - Fill tank 3. Transition to heating when full.

15 Step_6 | GE REAL: WT103_VAL %R00204 IN1, 350.0 IN2 → Q | Run → R Step_6; S Step_7

16 Step 7 - Heat tank 3. Transition to wait when temperature >=70.

17

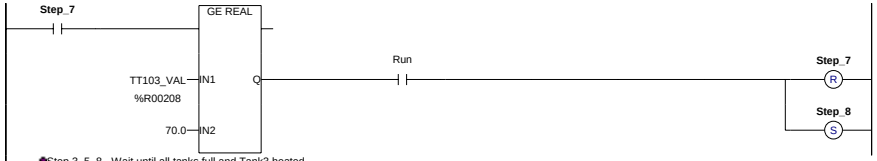

18 Step 3, 5, 8 - Wait until all tanks full and Tank3 heated.

19

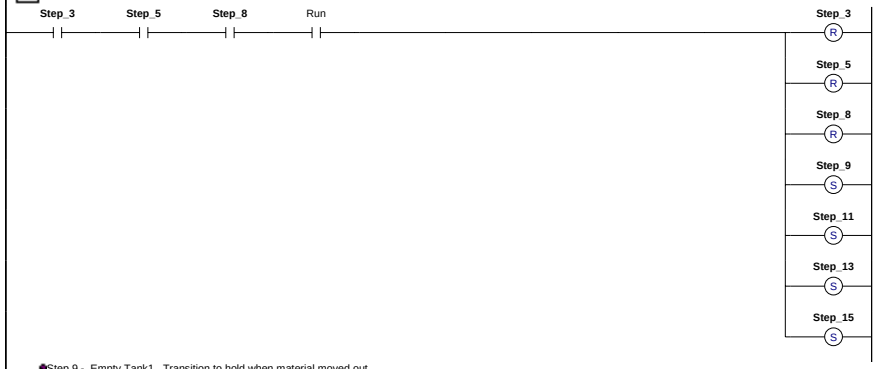

20 Step 9 - Empty Tank1 . Transition to hold when material moved out.

21

22 Step 11 - Empty half of material in Tank 2. Transition to hold when material moved out.

23

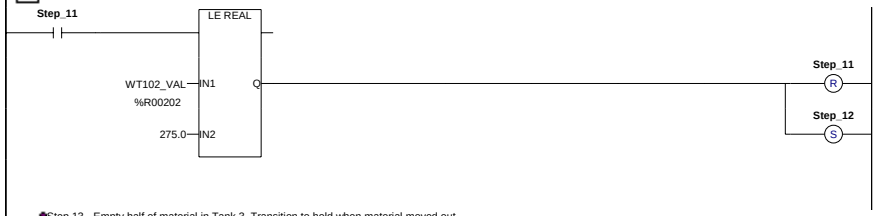

24 Step 13 - Empty half of material in Tank 3. Transition to hold when material moved out.

25

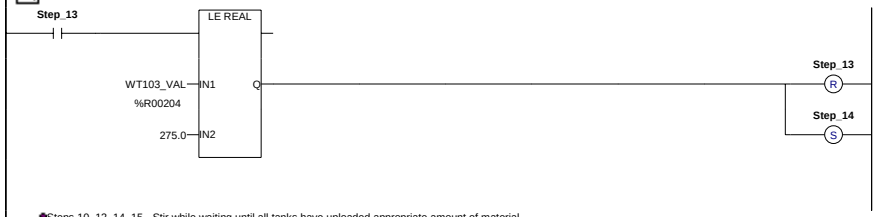

26 Steps 10, 12, 14, 15 - Stir while waiting until all tanks have uploaded appropriate amount of material.

Copyright (c) 2011 Dogwood Valley Press, LLC Copying and posting without permission prohibited.

27

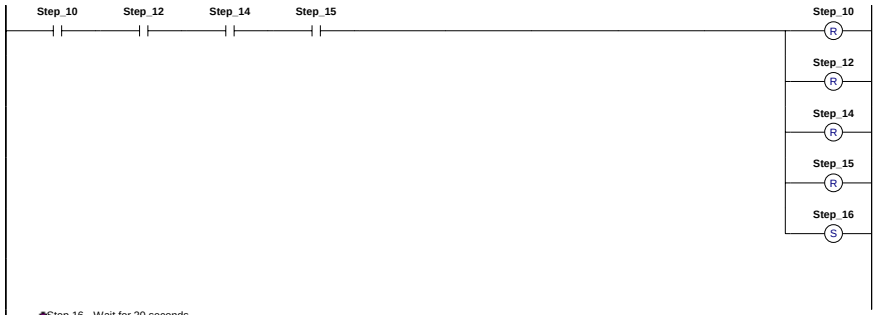

28 Step 16 - Wait for 20 seconds.

29

30 Step 17 - 250 sec reaction timer

31

32 Step 18 - Empty remainder of material in Tank 2. Transition to hold when tank empty.

33

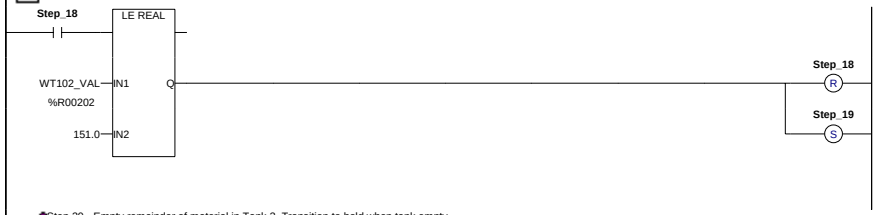

34 Step 20 - Empty remainder of material in Tank 3. Transition to hold when tank empty.

35

36 Step 17, 19, 21. Wait for 250 sec timer to be done.

Copyright (c) 2011 Dogwood Valley Press, LLC Copying and posting without permission prohibited.

37 Step_17 Reaction_Tmr.Q — Step_17 (R), Step_19 (R), Step_21 (R), Step_22 (S)

38 Step 22 - Empty Tank 4.

39 Step_22 — LE REAL (WT104_VAL %R00206 IN1, 303.0 IN2, Q) — Step_22 (R), Step_1 (S)

40 Physical Outputs - Valves

41 Step_2 Run — XV101_SOL (M) %Q00001

42 Step_4 Run — XV102_SOL (M) %Q00002

43 Step_6 Run — XV103_SOL (M) %Q00003

44 Step_9 — XV104_SOL (M) %Q00004

45 Step_11 | Step_18 — XV105_SOL (M) %Q00005

46 Step_13 | Step_20 — XV106_SOL (M) %Q00006

47 Step_22 — XV107_SOL (M) %Q00007

48 Pumps

49 Step_11 | Step_18 — P105_RUN (M) %Q00008

50 Step_13 | Step_20 — P106_RUN %Q00009

51 Step_22 — P107_RUN %Q00010

52 Stirrer

53 Step_15 | Step_16 | Step_17 | Step_22 — STIR_ON %Q00011

54 Heater

Copyright (c) 2011 Dogwood Valley Press, LLC Copying and posting without permission prohibited.

55

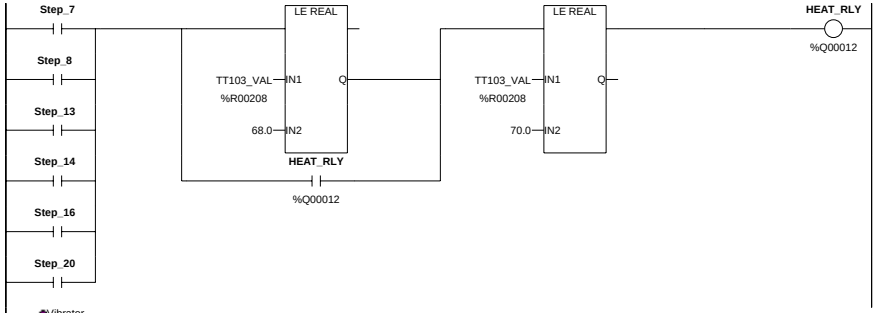

56 Vibrator

57

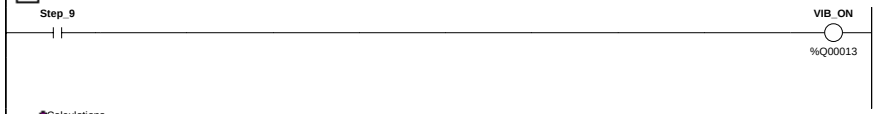

58 Calculations

Tank 1 weight

59

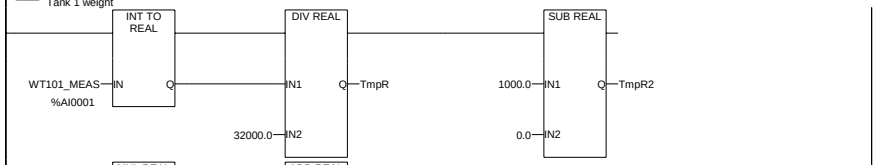

60

61 Tank 2 weight

62

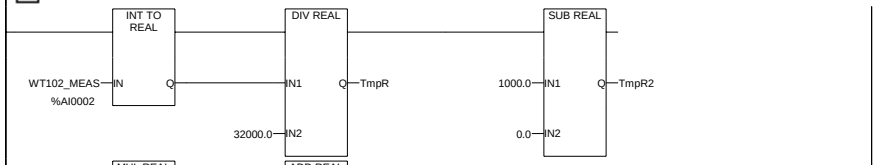

63

64 Tank 3 weight

65

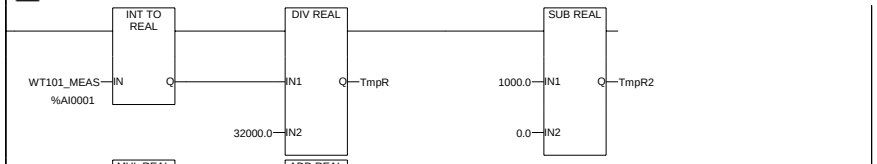

66

67 Tank 4 weight

Copyright (c) 2011 Dogwood Valley Press, LLC Copying and posting without permission prohibited.

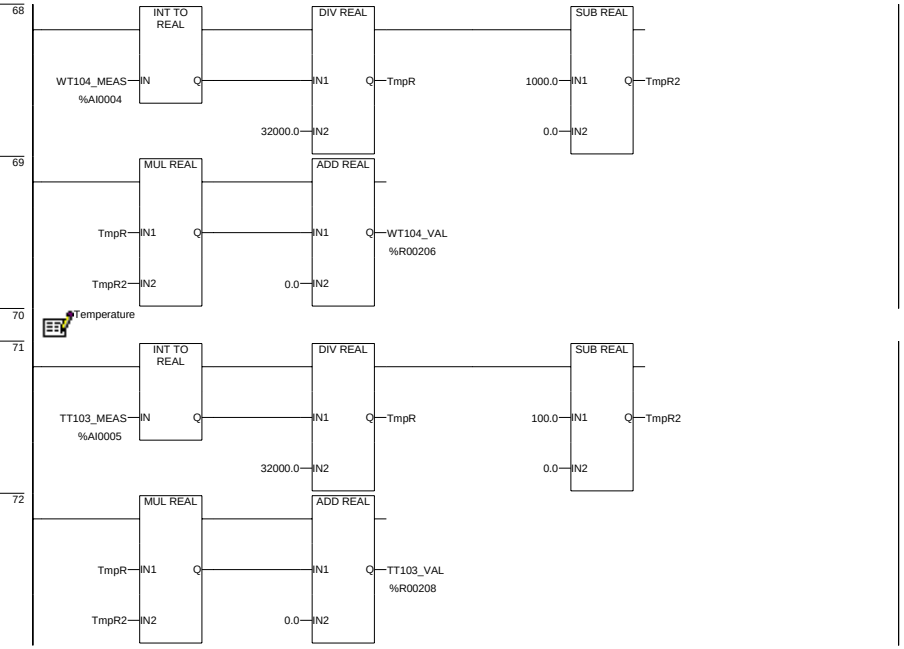

Copyright (c) 2011 Dogwood Valley Press, LLC
Copying and posting without permission prohibited.