1 Example 7.6 Simple Batch Control

Copyright (c) 2015 Dogwood Valley Press, LLC. Copying or duplication without permission strictly prohibited.

2 Start/stop/pause. Start prevented if reset in progress.

3 START_PB RESET_PB STOP_PB Step_8 Run

Run

4 Generate transition out of initial step into prestart checks

5 Run Step_1 Step_2 Step_3 Step_4 Step_5 Step_6 Step_7 Step_8 Step_1 (S)

6 Step 1 - Prestart checks

7 Step_1 LT REAL (LT104_VAL, 0.1) LT REAL (FIC101_PV, 0.1) LT REAL (FIC102_PV, 0.1) EQ REAL (FIC101_ACC, 0.0) EQ REAL (FIC102_ACC, 0.0) Step_1 (R) Step_2 (S)

8 Step 2 - Add A

9 Step_2 GE REAL (FIC101_ACC, INGA_DES_...) Step_2 (R) Step_3 (S)

10 Step 3 - Wait for A shutoff

11 Step_3 LT REAL (FIC101_PV, 0.1) Step_3 (R) Step_4 (S)

12 Step 4 - Add B

13 Step_4 GE REAL (FIC102_ACC, INGB_DES_...) Step_4 (R) Step_5 (S)

14 Step 5 - Wait for B shutoff

15 Step_5 LT REAL (FIC102_PV, 0.1) Step_5 (R) Step_6 (S)

16 Step 6 - Agitate Fast

17 TON (Agit_Tmr, IN, Q, PT, ET) Step_6 (R) Step_7 (S)

Step_6

MUL REAL (AGIT_TIME, 3600000.0) REAL TO DINT

18 Step 7 - Dump Tank

19 Step_7 LT REAL (LT104_VAL, 0.1) Step_7 (R) Step_8 (S)

20 Step 8 - Unlatch run

21 Step_8 Run Step_8 (R)

22 Conversion of level

23 INT TO REAL (LT104_MEAS) DIV REAL (32000.0) MUL REAL (15.0) LT104_VAL

24 Reset of accumulators in prestart step

Copyright (c) 2015 Dogwood Valley Press, LLC
Copying and posting without permission prohibited.

25 Step_1 — MOVE REAL 1: 0.0 IN, Q FIC101_ACC — MOVE REAL 1: 0.0 IN, Q FIC102_ACC

26 FIC101 setpoint moves - normally -2 moved in. Only in step 2 is setpoint set to desired flow.

27 Step_2 — MOVE REAL 1: INGA_DES_... IN, Q FIC101_SP

28 Step_2 — MOVE REAL 1: -2.0 IN, Q FIC102_SP

29 FIC102 setpoint moves - normally -2 moved in. Only in step 4 is setpoint set to desired flow.

30 Step_4 — MOVE REAL 1: INGB_DES_... IN, Q FIC102_SP

31 Step_4 — MOVE REAL 1: -2.0 IN, Q FIC102_SP

32 Valve controls

33 Step_2 Run — XV101_OPEN

34 Step_4 Run — XV102_OPEN

35 Step_7 Run — XV103_OPEN

36 Pump controls

37 Step_7 Run — P103_RUN

38 Agitator controls

39 Step_4 — A105_SLOW
Step_5
Step_7

40 Step_6 — A105_FAST

41 FIC101 Flow Loop - must convert setpoint into analog channel units

42 DIV REAL: FIC101_SP IN1, Q; 100.0 IN2 — MUL REAL: IN1, Q; 32000.0 IN2 — REAL TO INT: IN, Q FIC101_SPS

43 Convert flow measurement into units

44 INT TO REAL: FT101 IN, Q — DIV REAL: IN1, Q; 32000.0 IN2 — MUL REAL: IN1, Q; 100.0 IN2 — FIC101_PV

45 FIC101 PID Loop

46 PID ISA FIC101: FIC101_SPS SP, CV FY101; FT101 PV; Run MAN; #ALW_OFF UP; #ALW_OFF DN

47 Run — MOVE INT 1: 0 IN, Q FIC101[13]

48 FIC102 Flow Loop - must convert setpoint into analog channel units

Copyright (c) 2015 Dogwood Valley Press, LLC
Copying and posting without permission prohibited.

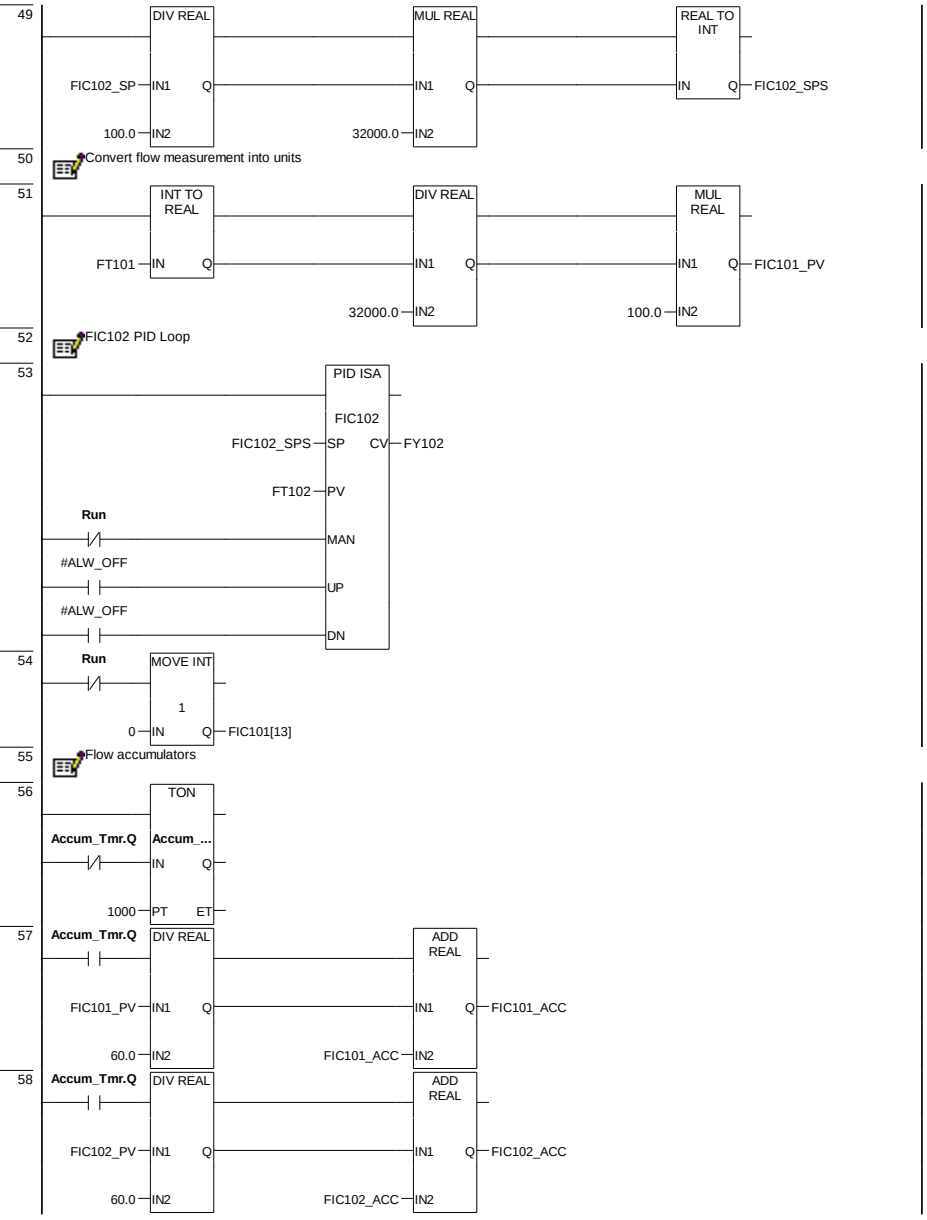

Copyright (c) 2015 Dogwood Valley Press, LLC
Copying and posting without permission prohibited.